SIEMENS

EAGLE SIDE-OF-POLE BRACKET
TWO-WAY CABLE GUIDE (ALUMINUM)
BULLETIN 2116

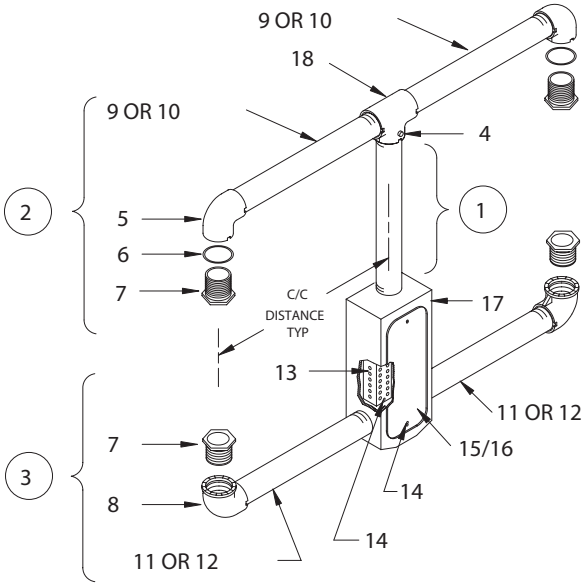

Back View of Compartment

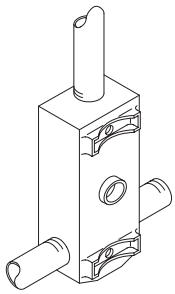

Saddle-Back
with Cable Guide
and Mounting Holes
-- also available
with Flat-Back
with Cable Guide
and Mounting Holes

ITEM	DESCRIPTION	PART NO.
1	CENTER PIPE SUPPORT SPECIFY SIGNAL CONFIGURATION	
2	2-WAY TOP BRACKET ASSEMBLY	U2212x*
3	2-WAY BOTTOM BRACKET ASSEMBLY	L2212x*
4	SET SCREW (1/4-20)	M50163
5	ELBOW (PLAIN)	M21110
6	GASKET	M60615
7	LOCKNIPPLE	M22241
8	ELBOW (SERRATED)	M21111

ITEM	DESCRIPTION	PART NO.
9	PIPE ARM FOR 8.5 C/C	P260750
10	PIPE ARM FOR 10.5 C/C	P260950
11	PIPE ARM FOR 8.5 C/C	P260650
12	PIPE ARM FOR 10.5 C/C	P260850
13	TERMINAL BLOCK	M13604
14	SCREW (10-32)	M50105
15	COVER	M23306
16	GASKET	M60606
17	TERMINAL COMPARTMENT	M23508
18	TEE (SLIPFIT)	M21211

*Bulletin 2116x

*x = "B" for 8½" C/C distance
x = "D" for 10½" C/C distance

Siemens ITS
Siemens Energy & Automation, Inc.
Business Unit Intelligent Transportation Systems

8004 Cameron Road · Austin, TX 78754
Ph: (512) 837-8310 · Fax: (512) 837-0196
http://www.itssiemens.com